VIRGIN BED

MAURO LIPPARINI

Bed with an elegant sculptural shape, essential and welcoming, an expression of MisuraEmme's sartorial vocation, able to combine softness and rationality.
Architectural profiles enhance the padded volumes and at the same time give a slight graphic sign. Available with or without storage in different sizes. It stands out for its enveloping headboard, available in fabric or leather.

TYPE / BEDS

DESIGNER

MAURO LIPPARINI

Mauro Lipparini earned a degree in Architecture in 1980 from Università degli Studi of Florence, where he also worked as a professor. He won the international design contests Young & Designer Milan (1987) and International Du Pont Award Köln (Germany, 1988 and 1989). Lipparini's intense activity in the field of industrial design covers office and home furniture, the textile industry and other products created for many companies in Europe and Japan. In architecture and interior design, Lipparini has concentrated mainly on private and public housing, on showrooms, retail sales outlets and exposition installations. Furthermore, Lipparini also designs and realizes advanced corporate identity image systems that range from graphics to editorial services to production. Lipparini's style is based on the essential shapes and the clear and decisive lines that are characteristic of natural minimalism. His creations are imbued with a joyful spirit and with an elating sense of aesthetic pleasure and creativity. Thanks to his free use of color, organic weave patterns and original visual ideas, Lipparini amplifies the palette of minimalism, conveying the spontaneity and power of this aesthetic style and projecting it towards a new era of great maturity and wellbeing.

HEADBOARD/BEDFRAME FINISHINGS

NODONE

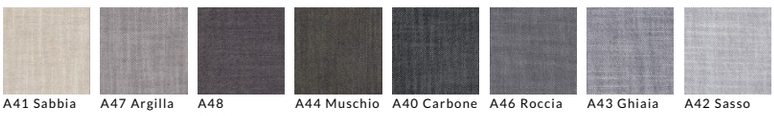

A41 Sabbia | A47 Argilla | A48 Corteccia | A44 Muschio | A40 Carbone | A46 Roccia | A43 Ghiaia | A42 Sasso

JOJO

B41 Cicogna | B46 Fungo | B48 Radice | B4A Ghianda | B49 Scoiattolo | B47 Marmotta | B44 Lichene | B43 Ghiro

B45 Tortora
B42 Piccione
B40 Corvo

629

B61 White
B66 Beige
B69 Light brown
B67 Taupè
B65 Brown
B68 Dark brown
B62 Light gray
B63 Blue
B60 Black
B64 Green

BARBAT

B31 Cigno
B36 Tortora
B37 Beccaccino
B34 Airone
B32 Ghiro
B33 Piccione
B35 Riccio
B30 Corvo

LARIO

C50 Notte
C59 Nocciola
C56 Latte
C53 Curcuma
C51 Cioccolato
C54 Cenere
C52 Cannella
C58 Avena
C55 Antracite
C56 Latte

TULSA

C82 Orso polare
C83 Airone
C85 Lepre
C88 Alpaca
C86 Cervo
C81 Corvo
C87 Alligatore
C84 Squalo blu

M155

C91 Platino
C92 Argento
C90 Ferro
C93 Oro
C94 Bronzo

FUNKY

C70 White mix
C71 Rock mix
C7A Nuts mix
C78 Green mix
C76 Mustard mix
C77 Orange mix
C72 Brown mix
C79 Blue mix
C73 Iron mix
C74 Grey mix
C75 Black mix

ARTIDE

C20 Ecrù

OSTELLATO

D4C Avorio
D4B Pietra Leccese
D4G Tortora
D4E Beige rosè
D4D Greige
D4I Senape
D4A City Grey
D4H Blu Eolie
D4F Grigio di Payne

BRERA

D31 Cigno
D36 Tortora
D37 Gufo
D34 Picchio verde
D32 Airone
D35 Piccione
D33 Rondine
D30 Corvo

INDIANSKOP

D1B Sabbia
D1G Creta
D1F Betulla
D1C Sasso
D1D Roccia
D1A Carbone
D1E Lichene
D1H Terra

TUNDRA

D2B Cigno
D2F Tortora
D2G Fungo
D2H Cicogna
D2L Ghianda
D2J Cervo
D2E Lichene
D2C Ghiro
D2D Lupo
D2K Talpa
D2A Corvo

FLYNN

D3B Rugiada
D3F Pietra
D3G Roccia
D3L Civetta
D3J Gufo
D3K Daino
D3E Muschio
D3H Guscio di lumaca
D3C Nebbia
D3D Pioggia
D3A Notte

GONG

E61 Cigno
E67 Creta
E6C Lumaca
E68 Scoiattolo
E62 Airone
E65 Tortora
E6A Blu fiume
E6B Talpa
E66 Riccio
E63 Passero
E69 Orso bruno
E60 Rondine
E64 Felce

TADAO

E81 White mix
E85 Sand mix
E83 Zaffiro mix
E86 Snow mix
E88 Bronze mix
E87 Cappuccino mix
E82 Stone mix
E80 Taupè mix
E89 Rust mix
E84 Green mix
E90 Sulfur mix

YELLOWSTONE

E96 Rugiada
E99 Sabbia
E98 Terra
E95 Pietra
E97 Corteccia

GEMMA PLUS

D54 Cigno
D59 Fungo
D61 Castagna
D65 Lumaca
D60 Nocciola
D57 Sotto bosco
D55 Ghiro
D56 Gufo
D73 Rondine
D66 Volpe
D58 Riccio

VELLUTO LARIO

F33 Pietra
F56 Sabbia
F57 Tortora
F51 Scoiattolo
F54 Volpe
F55 Cervo
F35 Rondine
F53 Corteccia

VELLUTO REGAL

F58 Mirtillo
F5A Castagna
F59 Muschio

LUXUS

E50 Bianco
F01 Ecrù
F02 Grigio perla
F05 Blu
F03 Lava
F04 Testa di moro

HIRA

E7A Ostrica
E79 Alga
E78 Sugar
E77 Fumè
E76 Liquirizia
E75 Vanilla
E74 Marron Glace
E72 Brick
E71 Curry
E70 E60
E73 Cacao

SORISOLE

F75 Noir
F77 Pietra
F76 Crepuscolo
F78 Foglia
F71 Dune
F73 Creta
F72 Terracotta
F70 Terre di Siena
F74 Bianco naturale

GAUCHO

F28 Neve
F21 Nebbia
F29 Grandine
F20 Tempesta di sabbia
F25 Solstizio
F26 Tramonto
F24 Acque tropicali
F23 Nube
F27 Foresta
F22 Tornado

ORSETTO

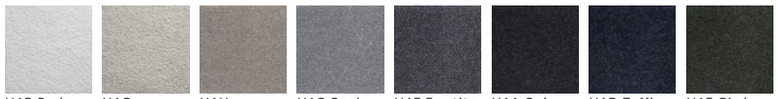

H1B Perla | H1G Conchiglia | H1H Alabastro | H1C Opale | H1F Ematite | H1A Onice nero | H1D Zaffiro | H1E Giada

H1J Agata | H1L Topazio | H1K Ambra

SMOOTH LEATHERS

H38 Sabbia | H36 Camoscio | H3F Muschio | H71 Testa di Moro | H3E Grigio Caldo | H35 Grigio Chiaro | H08 Asfalto | H26 Antracite

H3B Cuoio | H31 Naturale | H3A Terracotta | H34 Fango | H32 Taupè | H73 Nero

SUEDE LEATHERS

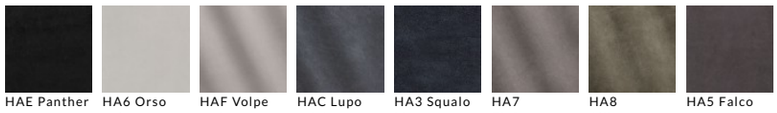

HAE Panther | HA6 Orso polare | HAF Volpe artica | HAC Lupo grigio | HA3 Squalo blu | HA7 Elefante | HA8 Alligatore | HA5 Falco

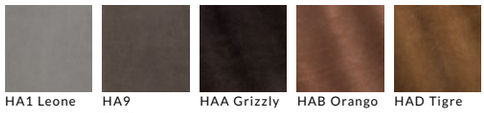

HA1 Leone | HA9 Antilope | HAA Grizzly | HAB Orango | HAD Tigre

BRUSHED LEATHER

HN3 Leone | HN2 Rinoceronte | HN1 Orso bruno

NABUK

N08 Orso polare | N05 Rinoceronte | N14 Antilope | N11 Lupo | N12 Balena | N09 Squalo blu | N10 Tigre | N07 Leone

N04 Alligatore | N06 Volpe | N13 Orso bruno

DIMENSIONS

Fixed bedspring (mattress W. 1600 x D.2000 mm)

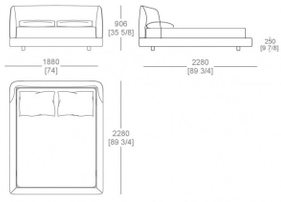

Fixed bedspring (mattress W. 1600 x D.2100 mm)

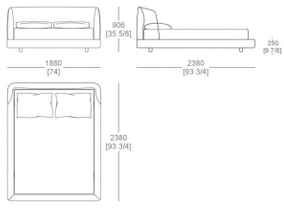

Fixed bedspring (mattress W. 1800 x D.2000 mm)

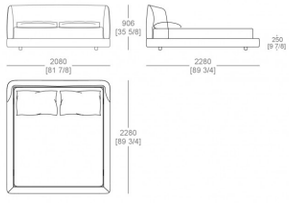

Fixed bedspring (mattress W. 1800 x D.2100 mm)

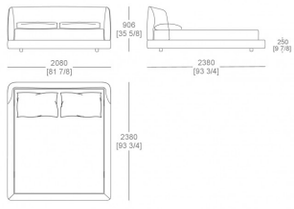

Raisable bedspring (mattress W. 1600 x D. 2000 mm)

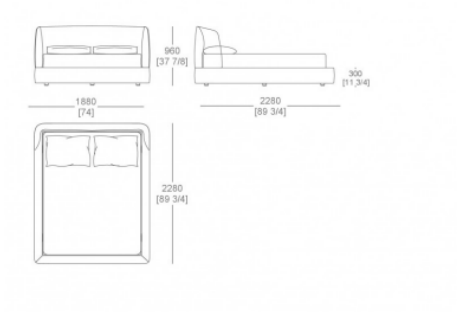
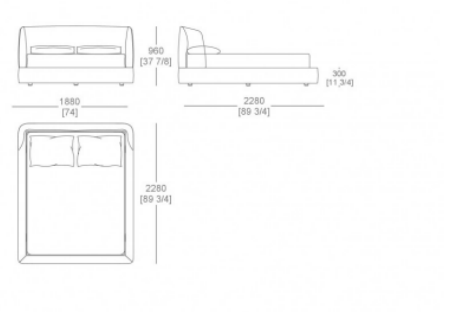
Raisable bedspring (mattress W. 1800 x D.2000 mm)